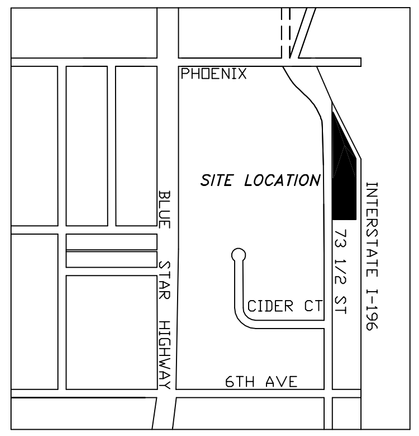

LOCATION MAP
NOT TO SCALE

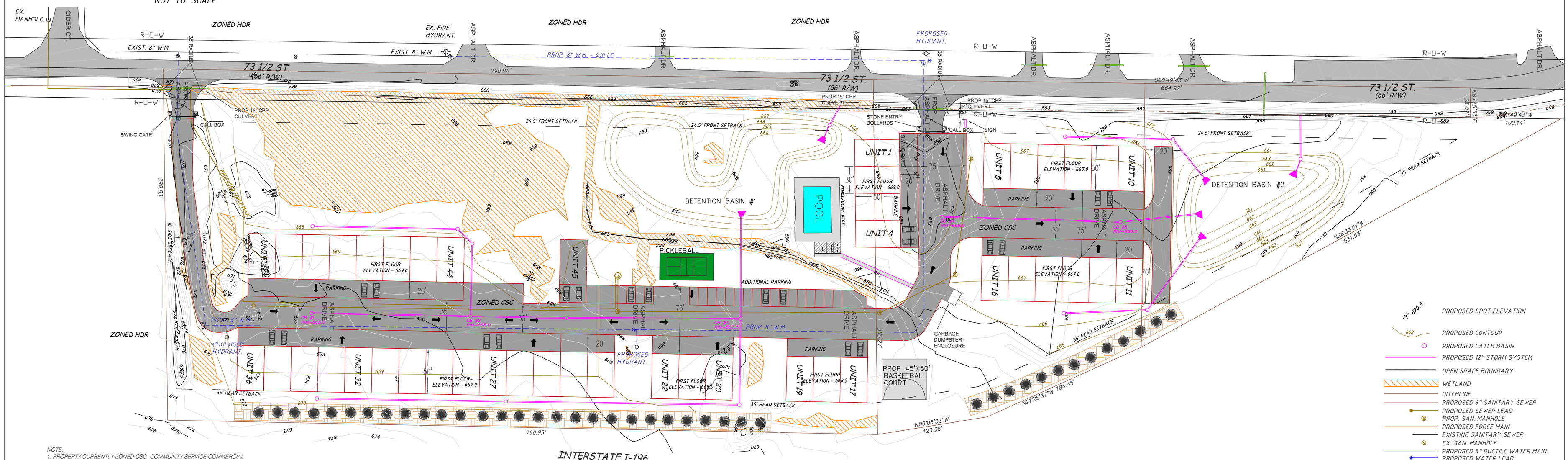

NOTE:
1. PROPERTY CURRENTLY ZONED CSC- COMMUNITY SERVICE COMMERCIAL
2. FIRE PROTECTION TO BE APPROVED BY FIRE MARSHAL
3. UTILITIES:
   A. SEWER AND WATER- SOUTH HAVEN TOWNSHIP MUNICIPAL SYSTEMS
   B. ELECTRIC - CITY OF SOUTH HAVEN
   C. STORM WATER SYSTEM - ON-SITE WITH 25 YEAR DETENTION PER VBCDC STANDARDS. W/0.13 CFS RELEASE PER ACRE.
4. ALL PARKING WILL BE IN FRONT OF EACH BARNDOMINIUM AND INSIDE THE BARNDOMINIUMS. TWO SPACES PER BARNDOMINIUM, TWO IN FRONT(ALSO SPACES INSIDE), ADDITINAL PARKING PROVIDED
5. PROPOSED SLIDE GATE SHALL HAVE KNOX BOX INSTALLED PER SHAES GUIDELINES.
6. BARNDOMINIUM LIGHTING SHALL BE WALL MOUNTED, EXTERIOR LIGHTS TO BE SHIELDED TO DIRECT LIGHT DOWNWARD AND COMPLY WITH SECTION 18.24 OF THE SOUTH HAVEN TOWNSHIP ZONING ORDINANCE.
7. DEVELOPMENT SIGN SHALL NOT EXCEED 8 FEET IN HEIGHT OR 25 SQFT IN AREA.
8. ALL GUTTER DOWN SPOUTS WILL BE CONNECTED TO PROPOSED STORM SYSTEM.
9. WATER SYSTEM TO BE CONSTRUCTED TO THE CITY OF SOUTH HAVEN SPECIFICATIONS.

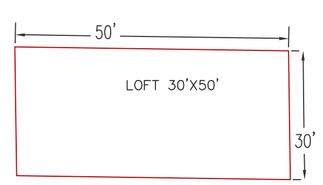

BARNDOMINIUM WITH LOFT DWELLING
NOT TO SCALE

- PROPOSED SPOT ELEVATION
- PROPOSED CONTOUR
- PROPOSED CATCH BASIN
- PROPOSED 12" STORM SYSTEM
- OPEN SPACE BOUNDARY
- WETLAND
- DITCHLINE
- PROPOSED 8" SANITARY SEWER
- PROPOSED SEWER LEAD
- PROP. SAN. MANHOLE
- PROPOSED FORCE MAIN
- EXISTING SANITARY SEWER
- EX. SAN. MANHOLE
- PROPOSED 8" DUCTILE WATER MAIN
- PROPOSED WATER LEAD
- EXISTING 8" WATER MAIN
- SETBACK
- UTILITY POLE
- PHONE PEDESTAL
- FOUND SURVEY MARKER
- FIRE HYDRANT
- WATER VALVE
- STREET SIGN
- WIRE FENCE
- EXISTING ASPHALT
- PROPOSED ASPHALT
- PROPOSED STORM WATER FLOW
- EXISTING GRADE
- SOIL BORING
- 5' TALL X 20' WIDE BERM
- CONIFEROUS TREE

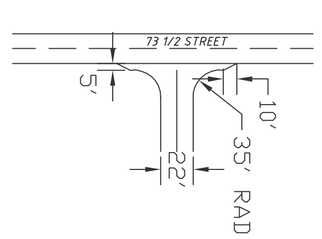

PROPOSED DRIVEWAY ENTRANCE DETAIL

1. DRIVEWAY ENTRANCE SHALL BE TO VAN BUREN COUNTY ROAD COMMISSION STANDARDS.
2. DRIVEWAY APPROACH SHALL BE 12" MDOT CLASS II SAND, 8" MDOT 22A GRAVEL BASE, TOPPED WITH 2" HMA BASE AND 2" HMA TOP COURSE. SEE DETAIL.
3. PROPOSED CULVERTS SHALL BE 15" CMP.
4. THERE IS NO EXISTING GRAVEL SHOULDER AT PROPOSED DRIVE LOCATION
5. NO OTHER UTILITIES OR TREES IN WAY OF PROPOSED DRIVEWAY.

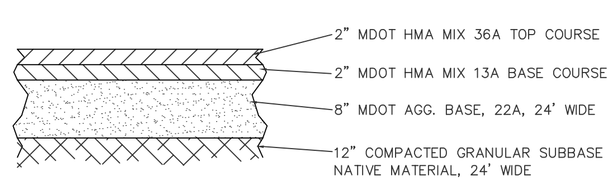

ROAD CROSS SECTION
NOT TO SCALE

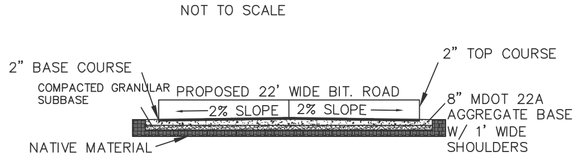

ROADWAY CROSS SECTION
NOT TO SCALE
SLOPE VARIES SEE PLANS

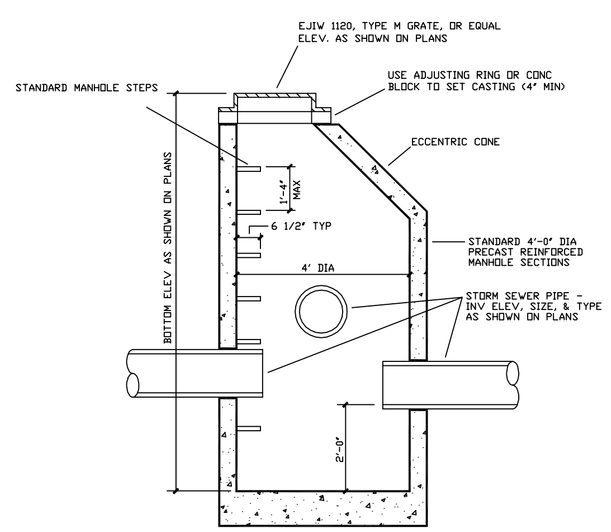

4' DIA DRAINAGE STRUCTURE

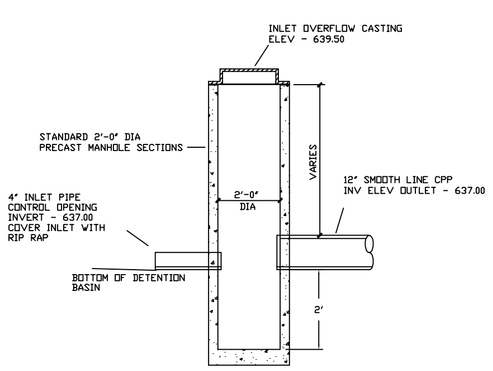

2' DIA DRAINAGE OUTLET STRUCTURE

PROPERTY OWNER:
SAFE AND EASY SELF STORAGE, LLC
4890 PAW PAW LAKE ROAD
COLOMA, MI 49038
PHONE – 269.468.6001

MERRITT MIDWEST INC.
MERRITT MIDWEST, INC.
CIVIL ENGINEERING • LAND SURVEYING • ARCHITECTURE
13560 76TH STREET
SOUTH HAVEN, MI 49090
PH: 269-637-9205
FX: 269-637-9206

SOHA DRIFT LOFTS
SOUTH HAVEN, MI

CONTOURS/GRADING PLAN

SHEET	OF	PROJECT NO.
2	2 SHEETS	25-018

SCALE:	DRAWN	REVISIONS:
1" = 50'	3/17/25 RP	

FILE NAME: